NOT FOR PUBLICATION UNTIL
RELEASED BY THE HOUSE
ARMED SERVICES SUBCOMMITTEE
ON READINESS

STATEMENT OF

VADM WILLIAM BURKE, USN,
OPNAV FLEET READINESS & LOGISTICS

BEFORE THE

HOUSE ARMED SERVICES SUBCOMMITTEE

ON READINESS

20 JULY 2010

NOT FOR PUBLICATION UNTIL
RELEASED BY THE
HOUSE ARMED SERVICES SUBCOMMITTEE ON
READINESS

DRAFT M&S TESTIMONY – 20 July 10

Chairman Ortiz, Rep Forbes, distinguished members of the House Armed Services Readiness Subcommittee; it's my honor to appear before you to testify on the Navy readiness models. Our Navy remains the preeminent maritime power, and continues to be globally engaged to prevent conflict and deter aggression in the western Pacific, Persian Gulf, Arabian Sea and Indian Ocean. Accordingly, we continue to provide support for the demand for U.S Naval forces to meet regional Combatant Commander operational requirements. Presently, over 40 percent of our Fleet (approximately 120 ships) is deployed to support a variety of missions, while demonstrating the overall capabilities of our Maritime Strategy. At sea in CENTCOM, we have more than 9,000 Sailors (including a carrier strike group) dedicated to providing air support to U.S. and coalition ground forces in Afghanistan, in addition to surface combatants supporting ballistic missile defense, anti-piracy, maritime security, counterterrorism, theater security, security force assistance and humanitarian assistance. On the ground, we have more than 12,000 Active and Reserve Sailors performing Navy Special Warfare and Navy Expeditionary Combat Command missions to support US and coalition forces in reconstruction efforts and providing critical infrastructure ashore, conducting interdiction patrols, leading counter-improvised explosive device patrols and providing related training to Iraqi/Afghan counterparts, and conducting combat operations.

Combatant Commander demand signal, as managed by the Global Force Management Board process, defines the capability needed to satisfy presence and surge

requirements worldwide. The Navy's operational readiness models identify the resource requirements necessary to produce that warfighting output and aptly predict changes to that output based on varying financial resource levels. Over the last several budget cycles, we recognized the need to transition from a level-of-effort requirement based heavily on historical norms, to a quantitative basis for reviewing and validating our current and future readiness requirements. We have embraced a family of resourcing models that have been subject to rigorous verification, validation and accreditation by institutions such as John Hopkins University Applied Physics Laboratory, providing the ability to predict the cost of global operations in a dynamic operating environment. These results form the basis of the Navy's readiness budget development throughout the programming, budgeting and execution process.

Readiness Modeling

The Navy operations and maintenance models have evolved in terms of sophistication and accuracy with the goal of linking resource requirements to specific readiness outputs. The original models were established by various war fighting platform resource sponsors to determine requirements for specific platform types. Over time those models were determined to be inadequate in modeling Fleet operations and accurately defining required resource levels. The original models were not capable of providing the level of detail required to support scenario driven analyses, analysis of budget adjustments or contingency operation pricing. Today, four interdependent maritime models linked through their relationship to the phases of the Fleet Response Plan (FRP), provide an integrated answer to support readiness requirement funding decisions. The

FRP phases are maintenance, basic, integrated and sustainment. They are explained in Appendix A. The four models below are described in greater detail in Appendix B.

Flying Hour Model

The Navy's Flying Hour Program model is used to program and budget resources for Navy and Marine Corps aviation operations necessary to achieve prescribed levels of readiness to conduct deployed operations and to train pilots and naval flight officers to properly man the Fleet.

Ship Operations Model

The Ship Operations model is used to program and budget resources for Fleet operations, including fuel, utilities, repair parts, and consumables for ships and submarines of the U.S. Navy except for those operated by the Military Sealift Command.

Ship Maintenance Model

The Ship Maintenance model is used to program and budget the resources to support the overhauls, repair, and maintenance of ships and submarines, except those operated by the Military Sealift Command including funding for scheduled and unscheduled depot and non-depot level workload conducted by both public shipyards and private sector contractors.

Aviation Depot Maintenance Model

The Aviation Depot Maintenance model is used to program and budget the resources to support the overhaul, repair and maintenance of Navy and Marine Corps airframes, engines and other aviation equipment. Depot maintenance is performed at both public and private facilities.

Readiness Output of the FRP Cycle

To express the readiness output of the fleet, the FRP phases of ships, battle-groups and units are described in terms of their ability to deploy operationally within a specified time period. The result is referred to as the FRP Operational Availability (A_o) metric and is shown as (X+Y+Z). While exact mapping is dependant on planned employment of units or battle-groups, the following table illustrates the relationship between FRP cycle phases and the FRP Ao metric that might apply to a battle-group.

FRP Cycle Phase	FRP A_o Metric
Maintenance	None
Basic	None
Integrated	Z
Sustainment	Y
Deployed	X

For example: For a carrier battle-group FRP Ao notional metric X+Y+Z = 3+3+1, the first number, X = 3 is the average number of CSGs (1 CVN, 1 CVW, 2 CGs, 3 DDGs & 2 SSNs) deployed in theater providing presence. Y = 3 is the average number of CSGs in the sustainment phase that have completed all necessary training and are available to surge within 30 days. Z = 1 is the average number of CSGs in the integrated training phase available to surge within 90 days.

Linking Readiness Output of the FRP Cycle to the Required Funding

Readiness models price each FRP phase using pricing factors shown in the Table below. A detailed discussion of each model is attached as Appendix B. Combining the readiness output provided by each phase of the FRP with the cost of that phase creates the required link between desired readiness output and budget levels.

Model	Key Inputs	Pricing Factors	Key Outputs
Flying Hour	Fleet Schedule Force Structure Training & Readiness Requirements Prior Year Execution Return Data	Cost per Flight Hour Cost Adjustment Sheet (CAS) process	Expected FRP Ao Readiness Rating (T-rating) Flying hours
Ship Operations	Fleet Schedule Force Structure Training & Readiness Requirements Prior Year Execution Return Data	Fuel Burn Rates by Ship Class Repair Part Cost Consumables Utilities	Expected FRP Ao Deployed / Non-Deployed steaming Days Total Steaming Days
Aviation Depot Maintenance	Force Structure Integrated Maintenance Concept Schedule (airframes) Engine Reliability - Flight Hours Prior Year Execution Return Data	Material & Labor Costs Workload Standards (man-hour estimates)	Workload by location and T/M/S # Backlog airframes & engines # Bare Firewalls FRP Ao
Ship Maintenance	Force Structure Class Maintenance Plans Fleet depot maintenance schedule Prior Year Execution Return Data	Material & Labor Costs Workload Standards (man-day estimates)	Workload by location & Ship Class Public Sector / Private Sector (Port) Workload Deferred Maintenance (# of unfunded availabilities)

Navy ships and aircraft are capital-intensive forces that, when properly maintained, are designed to last for decades to their associated expected service life (ESL). Scheduled maintenance of these ships and aircraft, and the associated training and certification of our crews between deployments is a key element of the cost to own and operate the fleet and our ability to reach ESL. Our readiness models are designed to accurately reflect the cost to own, train and operate our Naval forces.

Readiness Model Accreditation (VV&A process)

The four primary readiness models (Ship Operations, Ship Depot Maintenance, Flying Hour Program, Aviation Depot Maintenance) are used to make decisions that impact a large portion of the Navy's Operations and Maintenance account. The models follow a formal and rigorous validation process referred to as Verification, Validation and Accreditation (VV&A). This process ensures that modeling assumptions are well documented, that results produced by the models are stable, and that the correlation between the models behavior and actual Fleet execution is well understood. The models are accredited for three years. Near the end of the accreditation period, a formal team (Performance Pricing Model Accreditation Reviewing Team) is assembled to assess the ability of the model to provide a credible, traceable resource requirement.

Verification and validation functions are similar in concept to the application of quality control in manufacturing. The Performance Pricing Model Accreditation Reviewing Team is composed of individuals from OPNAV N80 (Programming Division), N81 (Assessments Division), N82/FMB (Fiscal Management Division) and

personnel from the Johns Hopkins University National Security Analysis Department. The Johns Hopkins University Applied Physics Laboratory "Quantitative Accreditation Method", a systematic/repeatable analysis process, was utilized to develop model improvement recommendations. The periodic accreditation review includes the model history, inputs/drivers, formulas/calculations, output, user and system documentation, performance levels, and the ability to simulate various scenarios of both fiscal and force level adjustments.

In addition to the periodic reviews, the process is reinitiated when models are modified to ensure that model documentation is accurate, and that the models are accurate and stable. The process is designed to provide recommendations for model improvement, track those recommendations through completion, and assign an appropriate level of accreditation so that decision makers clearly understand model limitations.

Accreditation Levels

Each readiness model is assigned one of several accreditation levels for performance/pricing as part of the review. These include:

<u>Not Accredited</u> The model is not useful in either the Programming or Budgeting phases of the PPBE (Planning, Programming, Budget and Execution) process and the circumstances resulting in this level of accreditation include: insufficient (or poorly defined) performance levels,

less than two key drivers, lack of resource sponsor endorsement, failure to link model to CNO guidance, more than 33% of program(s) modeled are Level Of Effort (LOE), or any other substantive weakness that would seriously undermine the credibility of the model in providing resource allocation decision insight.

Partial Accreditation The model is useful in all phases of the PPBE process except Budgeting. Less than 33% of modeled program is level-of-effort and requires separate action to convert model outputs for use in budget resource allocation decisions. The model is unable to routinely exercise the model's feedback loop. Other possible deficiencies include inadequate User's Guide or Configuration Management Plan, significant deficiencies in the model's V&V Report, including poorly defined or lack of a feedback loop, poorly defined performance levels, tenuous linkage to CNO guidance, technical errors in the model's computational aglorithms, or other discrepancies that would seriously undermine the credibility of the model's output.

Full Accreditation The model is useful in all phases of the PPBE process, whearas less than 20% of modeled program is level-of-effort. The model demonstrates the ability to trace between Programming and Budgeting phases of PPBE process. The model is useful in shaping Navy PPBE

Budget resource allocation decisions, and model results (output) can be compared to actual execution data.

All four of the models were certified at the Full Accreditation level during the POM-10 PPBE (FY 2008) cycle and will be reviewed again prior to the POM-14 PPBE (FY 2011) cycle. All four models have been awarded the Full Accreditation designation and are used throughout the entire PPBE process. Data from the most recent execution year is used as a feedback to determine if the planning and programming is consistent with actual requirements, allowing assessment review and adjustments where deviations are identified. Accurate use of inflation and pricing guidance is identified as a step in the accreditation process. All models meet an industry standard of less than five percent error acceptance level.

Generating the Navy's Budget

Use of Models in Planning, Programming, Budgeting, and Execution (PPBE)

Readiness models are used throughout the PPBE process as follows:

Planning: During the PPBE Planning phase, working groups review model accuracy based on the latest execution data available and make change recommendations. Those changes may be in the form of modeled requirement data such as the notional amount of work needed to complete a specific CNO availability for a specific ship class or in the form of an algorithm change such as changing travel requirement calculations to recognize the additional mandays of cost associated with travel.

Programming: During the Programming phase of PPBE, requirements working groups update the models for the latest Fleet operations and maintenance schedules and certified data such as civilian personnel labor and benefits costs and private sector man-day rates. The resulting modeled requirement is used to determine the impact of account shortfalls. Accounts are balanced so that, for example, the Flying Hour model FRP Ao output matches the Ship Operations Carrier Strike Group FRP Ao output.

Budgeting: During the PPBE Budgeting phase, the models are updated for significant schedule and certified data cost changes. The readiness impact of the changes is determined and budget issues are prepared to rebalance account input as required.

Execution: Fleet Readiness models are the result of significant focused effort designed to ensure that model output accurately reflects execution. Originating as a simple programming and budgeting tool, today's models are sufficiently detailed and user friendly to allow rapid mitigation and pricing of execution issues. Examples include:

- Calculation of the cost and impact of emergent operational requirements such as Operation Unified Response.
- Calculation of the cost and impact of emergent maintenance emergencies such as the grounding of the USS Port Royal.
- Calculation of the downstream cost and impact, both maintenance and operational, of the delayed delivery of the USS ENTERPRISE Extended Docking Selected Restricted Availability.

Where legacy models tended to price each element in isolation, today's readiness models contain cross model linkages that allow accurate recognition of cross model issues. Examples include:

- Cross model use of the CNO maintenance schedule allows the ship operations model to recognize and account for maintenance schedule changes.
- Linkage of intermediate and depot maintenance models with military billet information allow the impact of the military manning decisions to be accurately reflected in the maintenance requirement.
- Dynamic private sector port workload pricing allows the impact of port workload on prices to be accurately reflected in maintenance requirements.

Model detail is sufficient to allow effective study of potential cost mitigation options. Examples include:

- Readiness models have been used to price the impact of energy savings initiatives such as LED lighting and stern flaps on operational costs.
- Readiness models have been used to price the impact of the use of alternate energy such as the "Green Hornet" F/A 18 bio-fuel demonstration on operational costs.
- Readiness models have been used to calculate the operations and maintenance cost of alternate force structures in support of the Quadrennial Defense Review.

Impact of Funding Shortfalls on Readiness – Task Force Readiness II

To ensure common understanding of funding shortfall impacts on Navy readiness, and to ensure that the resulting risk is aligned with Navy priorities, the Chief of Naval Operations and Commander, United States Fleet Forces Command jointly commissioned Task Force Readiness II to develop detailed business rules for each account. These business rules, also referred to as "step down" rules, align with the following priorities:

1) Training & maintenance to support generation of forces in support of future presence requirements.
2) Presence to support the adjudicated Global Force Management Plan.
3) Surge in excess of that required to support future presence.

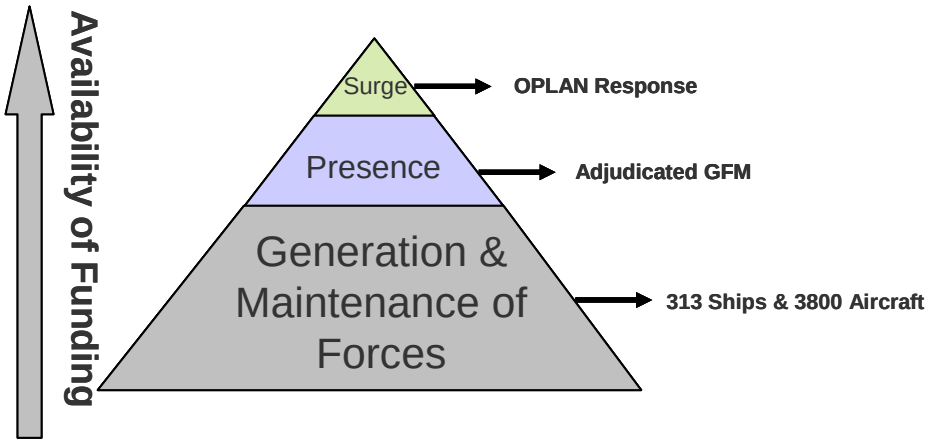

In accordance with these business rules, reduced funding for programmed steaming days are first taken against all 30 day surge (Y) requirements. Subsequent reductions are taken against Independent Deployer and Amphibious Readiness Group 90 day surge (Z) and presence (X) requirements prior to impacting any Carrier Strike Group presence (X)

requirements. The net result works to reduce 30 and 90 day surge (Y+Z) requirements, before impacting presence requirements (X) for Carrier Strike Groups, Amphibious Ready Groups, or Independent Deployers.

Conclusion

In the past several years the Navy has transitioned from a series of independent, level-of-effort based models that were based on past execution data to four significant interdependent quantitative readiness models that provide the critical linkage between requirements and readiness outputs. This linkage is essential to resource decision-making throughout the entire PPBE process in today's fiscally constrained environment.

Planned future model improvements will increase and strengthen the cross model linkages, reduce repetitive user work by automating inputs, and improve predictive capabilities.

I appreciate the committee's interest in the Navy's modeling and requirements generation efforts and look forward to discussing with you further.

Appendix A – Fleet Response Plan (FRP)

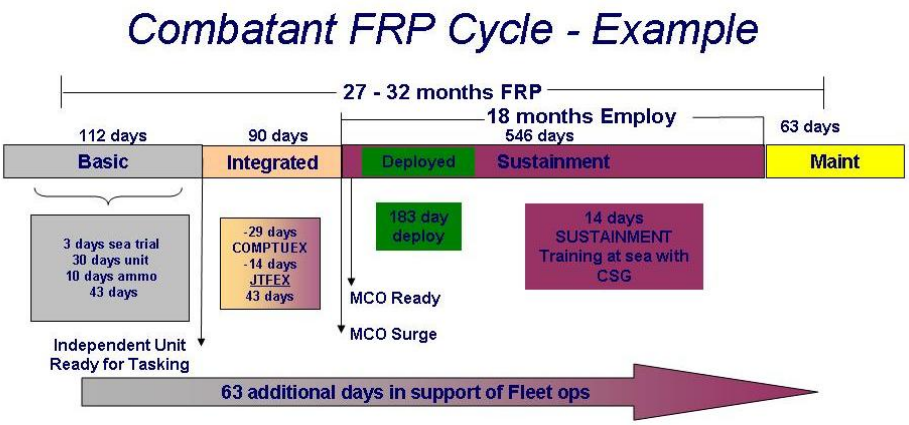

Four major phases constitute the FRP cycle:

Basic Phase (Unit-Level Training): The Basic Phase occurs at the start of the FRP cycle, and focuses on completion of the Type Commander (TYCOM) Unit-Level Training requirements: team training both onboard and ashore; unit-level exercises in port and at sea; and unit inspections, assessments, qualifications, and certifications. Units that have completed the Basic Phase are ready for more complex integrated training events and may be characterized as:

(a) Independent unit Ready for Tasking (RFT). Upon completion of the Basic Phase, units may be employed in support of Homeland Defense; counter-narcotics operations, Visit, Board, Search and Seizure missions, or similar, focused, and limited missions.

(b) Amphibious Task Force (ATF) Surge. ATF Surge ships can provide lift support only, and are not typically certified to conduct the full breadth of amphibious specialty tasks. These ships are capable of conducting combat and administrative loadout of ground forces in support of emergent requirements. They may support Special Operations Forces, Special Purpose Marine Air/Ground Task Forces, adaptive force packages, or provide lift as required.

Integrated Phase: The Integrated Phase of training is designed to synthesize individual units and staffs into aggregated, coordinated strike groups. The Integrated Phase may be may be adapted in order to provide training for Major Combat Operations (MCO) Surge certification and/or tailored training to support emergent Combatant Commander requirements for a specific capability. These units and forces may be characterized as (in order of increasing readiness):

(a) Maritime Security Surge (MSS): Typical MSS missions include Maritime Interception Operations, Strategic Offensive Forces support, anti-piracy operations, Theater Security Cooperation, and Information Operations.

(b) Major Combat Operations (MCO) Surge: MCO Surge ready units and forces are certified ready for operational employment and will have demonstrated the capability to function as a Navy-Naval combat force, but not necessarily to the level to lead such operations.

(c) Major Combat Operations Ready: MCO Ready units and forces are certified as fully capable of conducting all forward-deployed operations. To achieve certification, they must demonstrate the ability to operate in joint/coalition operations and proficiency in leading (vice only participating as is the case for MCO Surge) required missions. During deployment, units and forces maintain proficiency through ongoing training, exercises, and normal operations, as directed by higher authority.

Sustainment Phase: The Sustainment Phase begins upon completion of the Integrated Phase, continues throughout the post-deployment period and ends with the commencement of the Maintenance Phase. Deployments in support of Combatant Commander Global Force Management requirements occur within the Sustainment Phase. Sustainment consists of a variety of training evolutions designed to sustain war-fighting readiness as a group, multi-unit or unit until and following deployment.

Maintenance Phase: All deployable elements of Navy forces have a Maintenance Phase which ranges from fifteen weeks for surface combatants undergoing a non-docking pier side restricted availability up to 10.5 months for an aircraft carrier undergoing a Dry Docking Planned Incremental Availability. The Maintenance Phase is critical to the success of FRP since this is the period in which major shipyard or depot-level repairs, upgrades, and modernization installations occur.

The FRP Ao metric: Navy Readiness requirements are stated by combining average adjudicated GFM Plan presence requirements and the surge requirements needed to support the most stressing OPLAN in an X+Y+Z format where X represents the number of ships or battle-groups deployed, Y represents the number of 30-day surge ready ships or battle-groups, and Z represents the number of 90-day surge ready ships or battle groups. For example:

- A Carrier Strike Group FRP Ao of **3 + 3 + 1** means an average of 3 deployed Carrier Strike Groups, 3 Carrier Strike Groups ready to surge within 30 days, and 1 additional Carrier Strike Group ready to surge within 90 days. This metric would include all units of the battle group, typically one Aircraft Carrier, five Cruiser-Destroyers, and two Submarines.

A Cruiser – Destroyer FRP Ao of **27 + 25 + 14** means an average of 27 deployed Cruisers or Destroyers, 25 Cruiser or Destroyers ready to surge within 30 days, and 14 additional Cruisers or Destroyers ready to surge within 90 days. Please note that Cruisers or Destroyers that were assigned as part of a Carrier Strike Group would count towards both the Carrier Strike Group FRP Ao metric and the Cruiser – Destroyer FRP Ao metric.

Appendix B – Readiness Models

Flying Hour Model

The Navy's Flying Hour Program (FHP) resources Navy and Marine Corps aviation operations to achieve prescribed levels of readiness to conduct deployed operations and to train pilots and naval flight officers to properly man the fleet. The flying hours required to accomplish these missions and the cost per hour (CPH) for each flying hour are determined annually for each budget cycle. The FHP models were fully accredited by Johns Hopkins University and OPNAV N8B in January 2009.

The Flying Hour Resource Model (FHRM) compiles the flying hour requirement. The main inputs to FHRM are: (1) Global Force Management Schedule; (2) Training and Readiness (T&R) requirements; (3) Readiness objectives – for the Navy, it is a tiered readiness profile (Fleet Response Training Plan – FRTP) and for the Marine Corps it is a steady state readiness to allow for a surge-ready force; (4) Crew-Seat Ratio (CSR) – required number of crews per aircraft; (5) Aircrew Manning Factor (AMF)– level at which each squadron's aircrew is manned; and (6) Primary Authorized Aircraft (PAA) – the number of aircraft authorized to a squadron for the performance of its operational mission. The Marine Corps operational flying hour requirement is calculated in the Core Competency Resource Model which is then input into FHRM. The Marine Corps uses percent Table of Organization in lieu of the Navy's AMF, CSR, and PAA. The inputs to the operational flying hour requirement can be seen below.

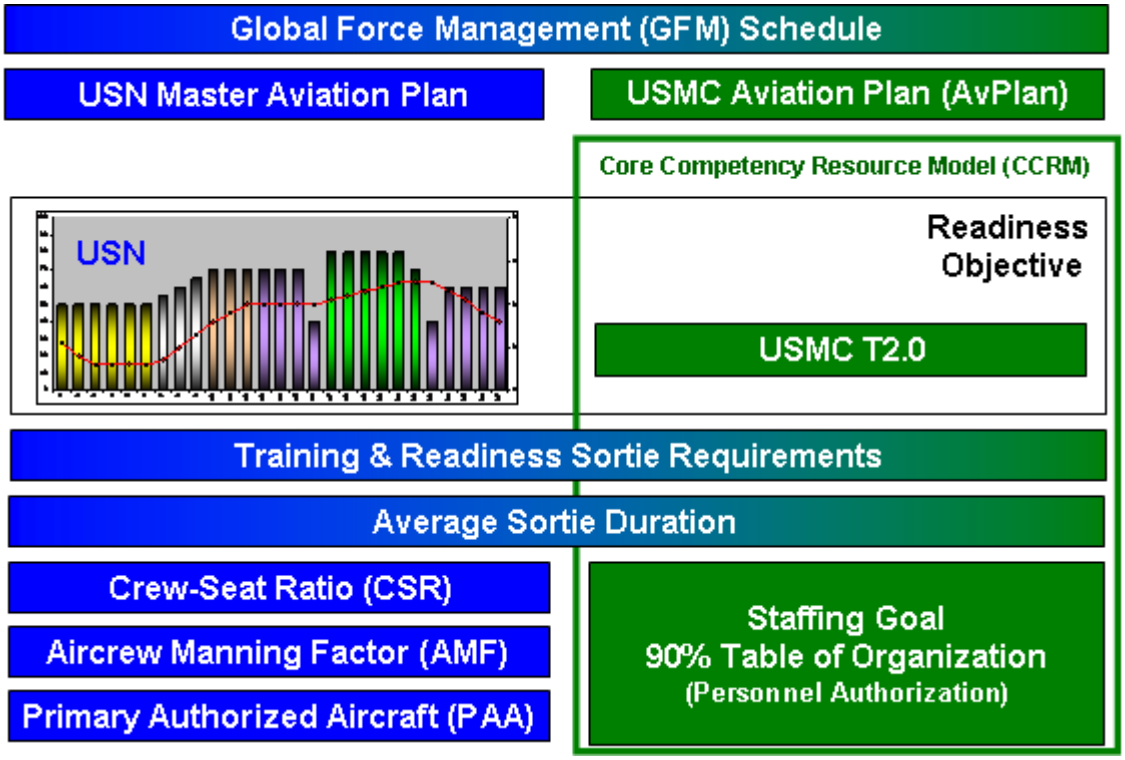

Inputs in to the Operational Flying Hour Requirement

For pilot and naval flight officer flight training, the main inputs are: (1) Training Requirements Letter – published by the Chief of Naval Operations stating the required number of pilots and naval flight officers to be trained based on Navy and Marine Corps force structure and (2) Fleet Replacement Squadron (FRS) and Chief of Naval Air Training (CNATRA) syllabus hours – the flying hours required per student to properly train in all missions applicable to the student's T/M/S.

The cost per hour (CPH) for each T/M/S consists of four components: (1) Aviation depot level repairables (AVDLR) (FA) - repairable components required to conduct organizational level maintenance and repair to aircraft and installed systems; (2) Maintenance consumables (FM) – consumable parts and materials required to conduct

organizational level maintenance and repair to aircraft and installed systems; (3) Fuel (FF); and (4) Direct maintenance contracts (FW).

The CPH is constructed using the Flying Hour Projection System (FHPS) model. The model uses the most recent year of certified execution data for the aviation depot level repairable cost per hour, maintenance consumable cost per hour, and fuel consumption rate to establish a baseline CPH. This historical data is given an "intelligent vector" through the Cost Adjustment Sheet (CAS) process. The CAS system is a module in FHPS. There are three types of CAS submissions: (1) Adjustments to the FA or FM CPH to reflect an expected difference from the execution baseline in the future (e.g., installation of new aircraft components and reliability changes to current components); (2) Baseline budgets for new T/M/S that do not have sufficient historical data; and (3) Direct-maintenance contracts (FW).

All data is escalated through the FYDP using mandated Assistant Secretary of the Navy (Financial Management & Comptroller) programming rates. Next the CAS submissions are migrated to the FA and FM cost per hour, and the CAS FW submissions produce the FW cost per hour. The next process is the application of the Center for Naval Analyses (CNA) flying hour and aging factor. The CNA factor is based on a statistical model of how the consumption of AVDLRs per flying hour changes with the age of the aircraft and the number of flying hours per aircraft. The development of the cost per hour is shown below.

.

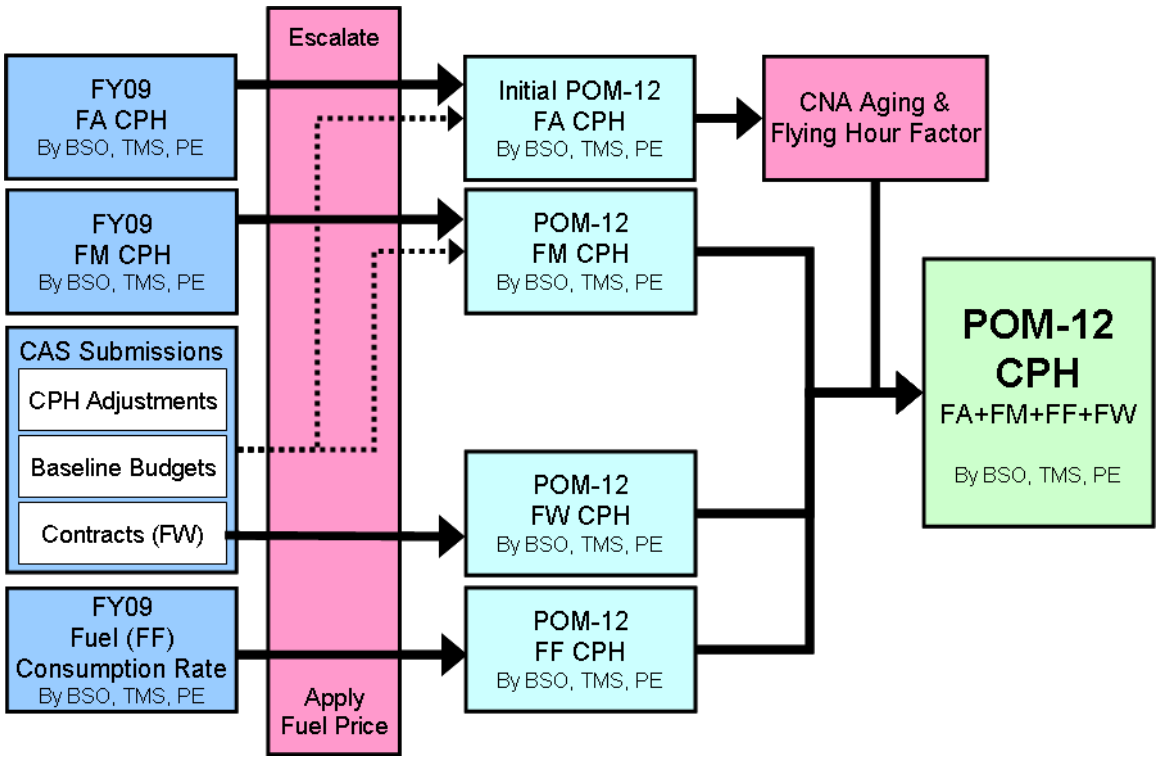

Building the Cost Per Hour (CPH)

The flight hour requirement from FHRM is an input to FHPS, which then applies the cost per hour to generate the FHP requirement in dollars. In FHPS, desired funding levels are applied to the requirements as the budget proceeds through its milestones. FHPS allows for queries by T/M/S, BSO, service, and/or program element (PE). Budget versions in FHPS include historical execution data, historical budgets, various funding scenarios, and working budgets.

The FHRM and FHPS models are used for risk analysis and trade-off decision making. Cost per hour is sent to FHRM through a feedback loop from FHPS. With the cost, FHRM can calculate the impact of funding changes through readiness (T-rating), operational availability (FRP Ao), and flight student deferral metrics. Additionally,

FHRM has extensive functionality to perform analyses at detailed level of funding changes or comparison of different budgets.

Ship Operations Model

The Ship Operations model is used to program and budget the Fleet Readiness requirement for ships and submarines of the U.S. Navy except for those operated by the Military Sealift Command. The Ship Operations model accounts for:

- Fuel
- Utilities
- Repair Parts
- Consumables
- Counter-Terrorism
- Training-Travel-Per Diem

Historically, the ship operations requirement was based on a number of deployed / non-deployed steaming days per quarter per ship class. There was no direct connection between programmed steaming days and what was actually required to prepare for and execute the operational schedule.

The model prices fuel, utilities, repair parts, consumables, travel, training, per diem, and counter-terrorism protection costs by Fleet, FRP phase and ship class. Combining the readiness output provided by each phase of the FRP with the cost of that phase creates the required link between readiness and requirement.

The following sections provide an explanation of the different cost elements supported by the ship operations model. *An example for a DDG-51 class ship is included in the description of each model element. Values used for illustration are notional for the basic phase of a DDG-51 class destroyer that is scheduled to become part of a Carrier Battle Group. This phase takes 112 calendar days to complete with 40 days spent underway. At the end of the basic phase the DDG-51 is 90 day surge ready (Z).*

Ship Fuel: Petroleum fuel requirements vary with the price of fuel, the number of underway (UW) days required for each phase, and the average burn rate for each UW and not-underway (NUW) day.

For the DDG-51 basic phase example:

UW fuel requirement = 40 days UW x 500.6 bbl/UW day x $115.18 / bbl = $2,307K

NUW fuel requirement = (112-40) days x 17.5 bbl /NUW day x $115.18 / bbl = $145K

Total basic phase fuel requirement = $2,307K + $145K = $2,452K

Ship Utilities: Utility requirements include electric power, shore steam, potable water, oily waste, and shore sewage but does not include phone service or garbage removal. Utility requirements vary with the local cost of utilities and the number of NUW days required for each phase.

For the DDG-51 basic phase example:

Basic phase Utilities = (112-40) days x $2,751 per NUW day = $198K

Ship Repair Parts: Parts and related materials required to conduct organizational level maintenance and repair to installed systems. Repair parts requirements vary by phase and by the cost of repair parts.

For the DDG-51 basic phase example:

Basic phase Repair Parts = 112 days x $6,118 per day = $685K

Ship OPTAR: OPTAR funds a long list of shipboard requirements including equipage items, personnel safety equipment, consumables, garbage removal, tugs, pilots, telephone service, and medical / dental allowance list items. OPTAR requirements vary by phase and by the local cost of goods and services.

For the DDG-51 basic phase example:

Basic phase OPTAR = 112 days x $3,026 per day = $339K

Ship Administration: Funds travel, TAD, and emergency leave costs for ships force personnel. Ship Administration requirements vary by phase.

For the DDG-51 basic phase example:

Basic phase Admin = 112 days x $197 per day = $22K

Counter Terrorism (CT): Funds Ships Force protection equipment, protective barriers, picket boats, sentries where armed servicemen are prohibited, and dive services. Counter Terrorism requirements vary by phase.

For the DDG-51 basic phase example:

Basic phase CT = 112 days x $99 per day = $11K

The total basic phase cost for this hull is determined by summing each individual element. The same process is then applied for each phase of the FRP cycle (e.g. Integrated, Deployed, Sustainment, etc.) and each hull included in the FRP.

There is a formal feedback loop in place as means of comparing execution data to model performance. However, as this is a new model, developed in support of POM-10, the validity and accuracy of the feedback mechanism was not originally tested and was not to be tested until the conclusion of FY-10 upon the receipt of certified obligation data. This revised model is utilized for programming POM-12. The demonstration of the model performance capabilities was documented using POM-08 data, with the cost of fuel removed due to the unpredictable rates experienced during FY08. In place of cost, the number of barrels of fuel required was assessed for the year. Results of the model prediction, relative to actual certified obligations were 4.03% under the non-fuel requirement prediction and 3.85% over the fuel requirement prediction.

Aviation Depot Maintenance Model

The Aviation Depot Maintenance (ADM) Program resources the overhaul, repair and maintenance of Navy and Marine Corps airframes, engines and other aviation equipment. Depot maintenance is performed at both public (DoD) and private (contractor) facilities. Approximately 800 airframes and 2300 engines/models are overhauled per fiscal year. The Airframe and Engine Depot Readiness Assessment Models (ADRAM and EDRAM) are used to project depot requirements by airframe and engine T/M/S through the FYDP. The ADRAM and EDRAM models were fully accredited by Johns Hopkins University and OPNAV N81 in March 2009.

The ADRAM model forecasts total cost to perform the number of airframe inductions required to achieve the targeted readiness level. The ADRAM can also be used to determine the level of airframe readiness achievable, based on various resource allocation decisions, and estimate the impact of these decisions by T/M/S. Inputs to ADRAM are aircraft inventory, Flight Line Entitlement (FLE), Integrated Maintenance Concept (IMC), depot turnaround time (TAT), Title 10 Core requirements, CNO readiness goals, squadron deployment profiles, and unit cost per type of depot event. The output is dependent upon the number of airframe inspections, rework, and emergent repair requirements of Naval aircraft that will be scheduled in order to meet the established CNO readiness goals.

Depot airframes events are calendar based. Each T/M/S has a certain time interval in which the airframe is required to be scheduled for maintenance or inspection in accordance with the IMC. IMC is the Reliability Centered Maintenance based analysis

and “packaging” of organizational, intermediate, and depot preventive maintenance tasks. It is embedded in a platform’s maintenance plan to ensure tasks are performed at the fight interval and by the appropriate level of maintenance that will result in the highest degrees of availability and readiness at the lowest life cycle cost.

Depot TAT is the total amount of time that elapses from aircraft induction to returning an operational aircraft back to the fleet. TAT is dependent upon depot capacity constraints, complexity of inspection and repair, and available workforce. Capacity is contingent on the amount of airframe backlogs in the system and the current amount of work-in-process (WIP). In addition, the model considers depot core minimums which are prescribed by law. United States Code Title 10, Section 2466 stipulates that at least 50 percent of the funds made available for depot maintenance and repair “shall be used for the performance of depot-level maintenance and repair workload by employees of the Department of Defense”.

One of the key performance parameters for performance-based pricing models is for the output to be linked to readiness goals. The CNO’s readiness goal is to achieve 100 percent of PAA for deployed squadrons. The fleet provides the squadron deployment profile based on FRTP requirements.

The model generates program cost requirements by inputting depot event unit costs for each type of airframe incorporated in the program. These costs per unit (airframe) are based on engineered workload standards, labor rates, and material costs, and vary based

on whether the work is performed at an organic Naval, inter-service, or commercial depot. Unit costs are escalated per Assistant Secretary of the Navy (Financial Management & Comptroller) approved inflation rates and revolving fund rates. The formula for price of each T/M/S is workload standard times the labor rate plus direct material.

Using all of this information (backlog, WIP, TAT, core minimums, and unit cost by T/M/S), the funded airframe requirements are determined for each T/M/S. Airframes available are compared with the CNO's PAA goals to determine performance to the goal.

.

The EDRAM model forecasts the total cost of meeting an engine readiness goal. The output of the model is the cost to perform the required engine inductions necessary to return aircraft engines to Ready-for-Issue (RFI) status to achieve CNO objectives. Similar to the ADRAM, the EDRAM can also reveal program impacts of various resource funding levels. The model can be used to estimate the number of engines that can be inducted based on a certain level of funding and it can drill down through each engine T/M/S.

The current CNO goal for engine requirements is to have zero bare firewalls (BFW) and 90% of pool requirements for each engine T/M/S. The BFW metric is an aggregate accounting of total firewalls to support Flight Line Entitlement aircraft and support aircraft depot production schedules that need to be filled, minus the total RFI engines.

Pool requirements are built to have sufficient assets to meet both the peacetime demand and support initial wartime surge.

Key inputs to the EDRAM are planned flying hours, Mean Engine Flight Hours Between Removal (MEFHBR), the Intermediate Maintenance Activity (IMA) repair rate, current and projected aircraft inventory, and the unit cost per depot repair event for each T/M/S engine. Only those engines that cannot be repaired at the IMA level are inducted into the depot. Engine demand (removals for repair) is based on the number of forecasted flying hours as produced by the Flying Hour Resource Model (FHRM) and the MEFHBR. The engine removals for each T/M/S are calculated using the most recent 12 month average of MEFHBR as modified by predicted changes in reliability determined by engineering estimates from Naval Air Systems Command (NAVAIR), and dividing that into current projected flying hours. The remaining calculations are very similar to the ADRAM forecasting procedures. Engine requirements, based on demand, I-level repair rate, backlog and depot core minimum data, are determined. The unit costs per engine repair are based on build specs as developed by NAVAIR and the original equipment manufacturer. The costing methodology employed for the EDRAM mirrors the process discussed above for the ADRAM. Inflation rates, revolving fund rates, and workload standards are all factored into unit costs. The price to repair an engine for each T/M/S is obtained by multiplying the labor rate by the workload standard and adding the direct material. EDRAM then calculates the total engine program costs to perform at a certain level of engine readiness.

The ADRAM and EDRAM models are also used for risk analysis and trade-off decision making. These models validate airframe and engine requirements, choose the best mix to accomplish FRP Readiness Goals and depot inductions and projected backlog can be determined based on various funding levels. There is a feedback loop to verify the models' accuracy by comparing model projections against certified actual obligations.

Ship Maintenance Model

The Ship Maintenance account provides funding for scheduled and unscheduled depot and non-depot level workload conducted by both public shipyards and private sector contractors. Maintenance requirements are designed to ensure that ships, carriers, and submarines meet current readiness requirements and reach their expected service life.

The Ship Maintenance Model is divided into two major subsections, a traditional model and a mission funded model. Model inputs are based on the Class Maintenance Plan, Scheduled Modernization, and each ship's individual maintenance history. The Class Maintenance Plan specifies required dry-docking intervals, engineered maintenance requirements such as equipment overhauls, shaft replacements, and corrosion protection, and system certification requirements.

Class Maintenance Plans are prepared as part of new construction and are maintained by the three Life Cycle Maintenance Planning Activities: Submarine Maintenance Engineering Planning and Procurement Activity, in Kittery, ME, Carrier Planning Activity, Portsmouth, VA, and Surface Ship Life Cycle Management Activity, Portsmouth, VA. These three organizations monitor execution results and recommend Class Maintenance Plan updates based on those results.

The "**Traditional Model**", shown in Chart 1, contains the baseline maintenance scheduling for all vessels, defines the anticipated force structure, calculates total private industry expected costs, and continuous maintenance pricing. Traditional Model elements include:

a) **Emergent Restricted Availability/Technical Availability (ERATA)** is used to perform depot level unscheduled corrective maintenance.

b) **Other Restricted Availability/Technical Availability (ORATA)** is used to provide depot level support and maintenance. Items in this category include ship habitability upgrades, hull cleaning, flight deck non-skid coating repair and replacement, and technical support for combat and aviation systems.

c) **CNO scheduled availabilities** is depot maintenance for ships and submarines performed during dedicated maintenance availabilities. Labor pricing is derived from Private Sector Manday Rate (MDR) data published annually by Naval Sea Systems Command. Material requirements are determined based on a 3-year average of actual material costs per unit manday expended for each ship class

d) **Continuous Maintenance (CM)** is Depot Level Maintenance for surface ships performed outside of CNO scheduled availabilities. Labor and Material pricing use the same sources as CNO availabilities.

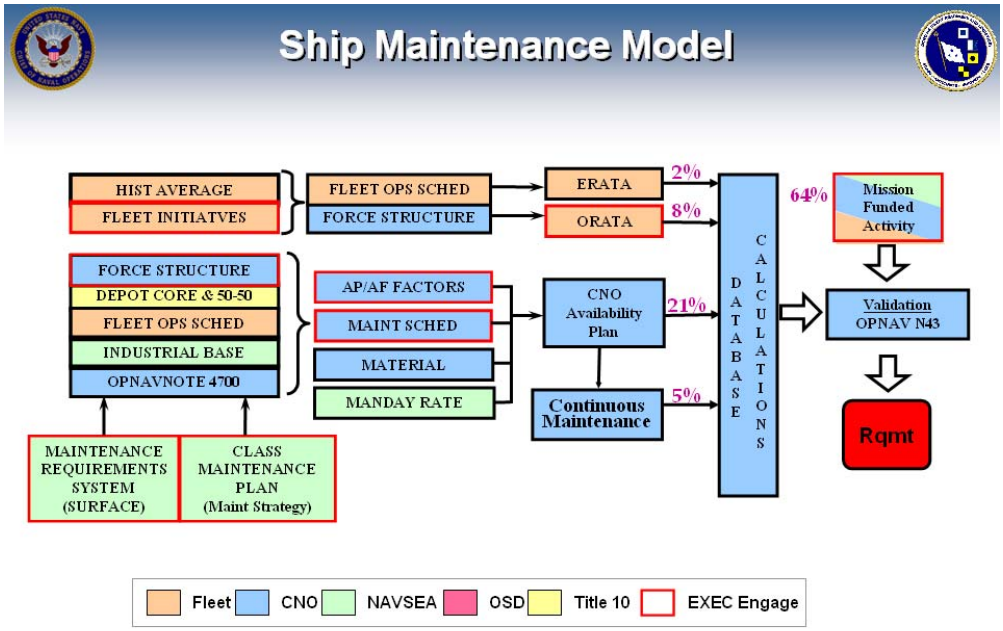

Chart 1: Traditional Ship Maintenance Model

The "**Mission Funded**" model, shown in Chart 2, is used to program and budget the overhead, labor, planning, parts, material, travel, and training costs associated with Naval Shipyard and Regional Maintenance Center operations.

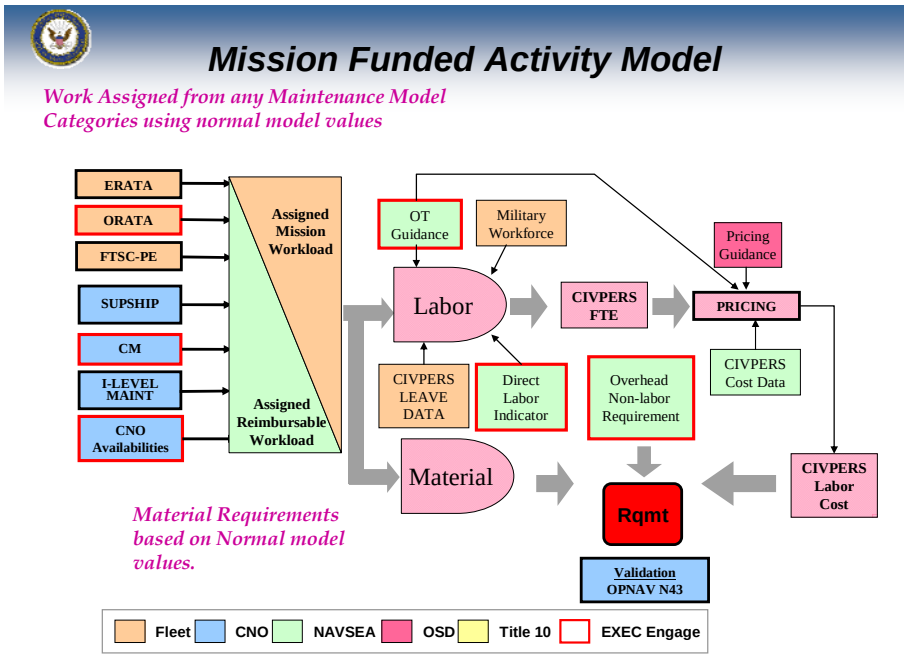

Chart 2: Mission Funded Activity Model

Naval Shipyards include Portsmouth Naval Shipyard, Norfolk Naval Shipyard, Puget Sound Naval Shipyard and Intermediate Maintenance Facility and Pearl Harbor Naval Shipyard and Intermediate Maintenance Facility. Mission Funded Naval Shipyard requirements are determined on an annual basis, based on class maintenance plan requirements. Mission Funded Activity workload includes elements of CM, ERATA, ORATA, Intermediate Level, and CNO Availabilities as assigned by the Fleet.

a) Shipyards are sized to execute designated Fleet work (mission) and reimbursable customer work.

b) Fleets have the flexibility to shift mission work force to emergent mission requirements.

c) All shipyards completed transition to Mission Funding from Working Capital Funding in FY 2007

Regional Maintenance Centers (RMC's) includes South West RMC, South East RMC, Mid-Atlantic RMC, Trident Refit Facility Kings Bay, and NSSF New London. The primary missions of RMCs are planning and execution of intermediate level repairs for assigned ships, Fleet technical support, continuous maintenance, and contracted private sector availabilities.

a) Workload requirements are based on the number of assigned ships, the type of ship, the availability schedules for the ships, the Integrated Class Maintenance Plans, and Fleet technical support.

b) Military manning at RMCs provides shore assignment opportunities, enhanced technical training and experience, and takes advantage of unique military repair capabilities.

c) The RMCs are sized using a combination of military, civilian, and contractor personnel to execute the assigned workload.

The primary model feedback mechanism is the continuous review and comparison of execution results performed by the Life Cycle Maintenance Planning Activities. When execution results vary significantly from the modeled requirement the applicable Life Cycle Maintenance Planning Activity analyzes the reasons for deviation and prepares a recommended change to the existing requirement. That recommended change is reviewed by the applicable Type Commander, the applicable Program Manager, United States Fleet Forces Command and approved by the Chief of Naval Operations.